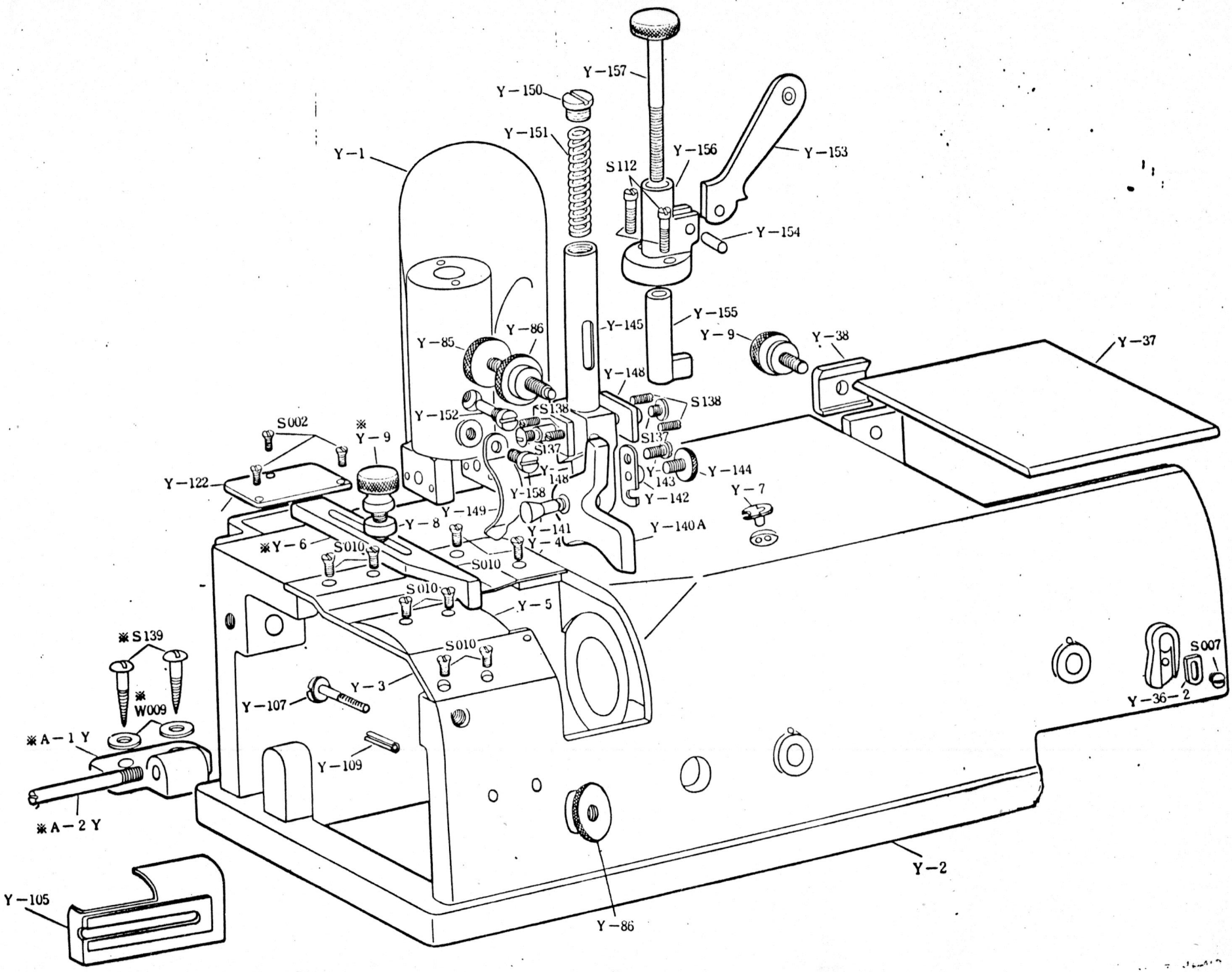
Y－157
Y－150
Y－151
Y－1
S112
Y－156
Y－153
Y－154
Y－155
Y－145
Y－9
Y－38
Y－37
Y－85
Y－86
Y－148
S138
S138
Y－152
S137
S137
S002
※Y－9
Y－122
Y－148
Y－143
Y－144
Y－158
Y－142
Y－7
Y－149
Y－8
Y－141
Y－140A
※Y－6
S010
Y－4
S010
S010
Y－5
S010
※S139
※W009
Y－3
Y－107
※A－1Y
Y－109
※A－2Y
S007
Y－36－2
Y－105
Y－2
Y－86

2.

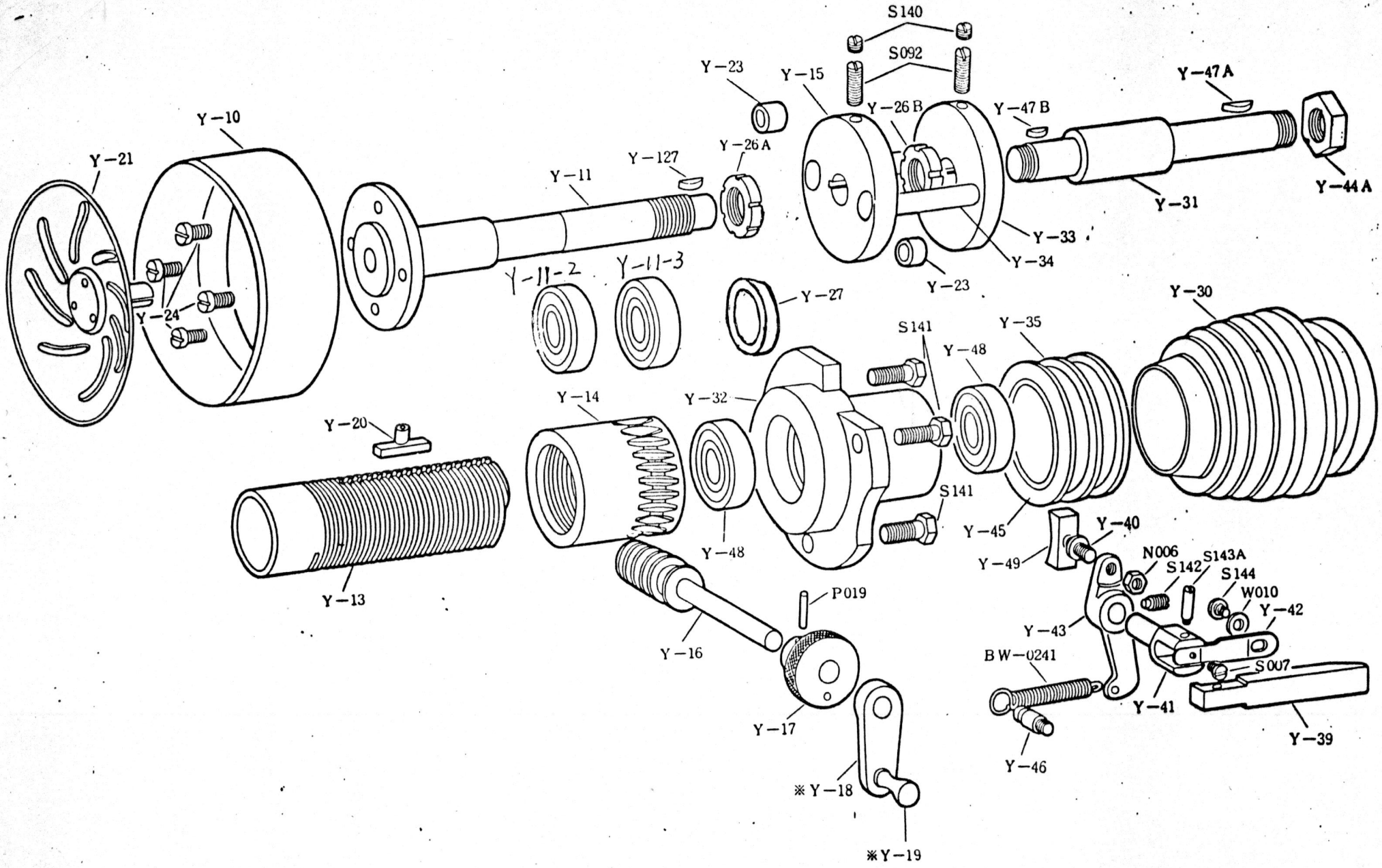
S140
S092
Y-23
Y-15
Y-47A
Y-26B
Y-47B
Y-10
Y-21
Y-26A
Y-127
Y-11
Y-44A
Y-31
Y-33
Y-34
Y-23
Y-11-2
Y-11-3
Y-27
Y-24
Y-30
S141
Y-35
Y-48
Y-14
Y-32
Y-20
S141
Y-45
Y-40
Y-48
Y-49
N006
S143A
S142
S144
W010
Y-42
P019
Y-43
Y-16
BW-0241
S007
Y-41
Y-39
Y-17
Y-46
※Y-18
※Y-19
Y-13

3.

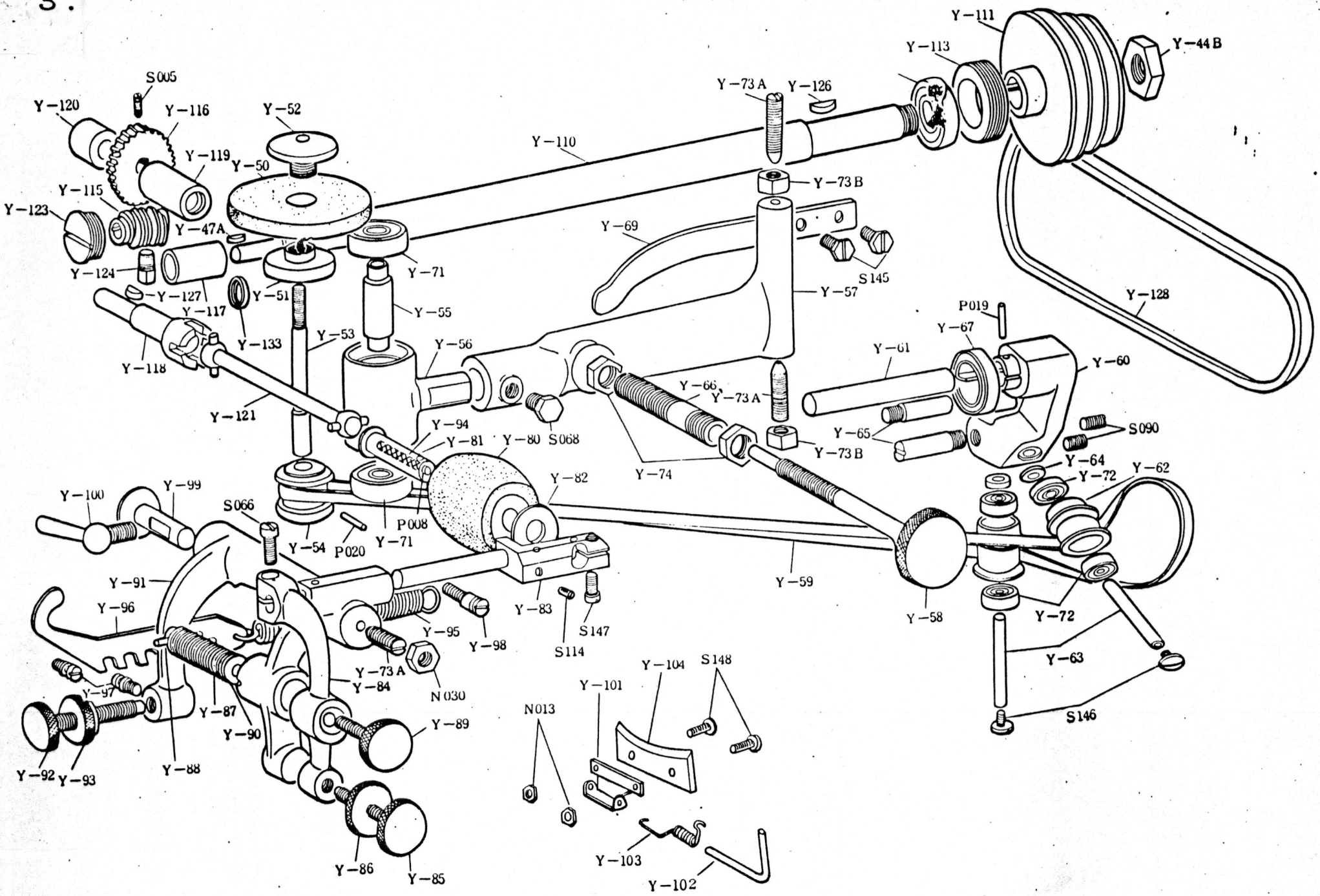

Y-111
Y-113
Y-44 B
Y-73 A
Y-126
S005
Y-120
Y-116
Y-52
Y-110
Y-119
Y-50
Y-73 B
Y-115
Y-123
Y-47A
Y-69
S145
Y-124
Y-71
Y-127
Y-51
Y-57
Y-128
Y-117
Y-55
P019
Y-67
Y-133
Y-53
Y-56
Y-61
Y-60
Y-118
Y-66
Y-73 A
Y-121
Y-94
Y-81
Y-80
S068
Y-65
S090
Y-73 B
Y-64
Y-74
Y-72
Y-62
Y-82
Y-100
Y-99
S066
P008
Y-54
P020
Y-71
Y-59
Y-91
Y-96
Y-83
Y-58
Y-72
Y-95
Y-98
S147
S114
Y-63
Y-73 A
Y-104
S148
Y-84
N030
Y-101
Y-97
Y-87
N013
Y-89
Y-90
S146
Y-92
Y-93
Y-88
Y-103
Y-86
Y-85
Y-102
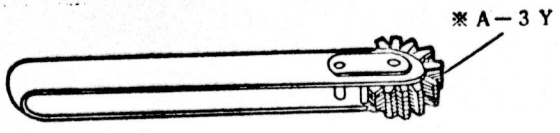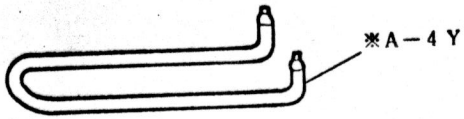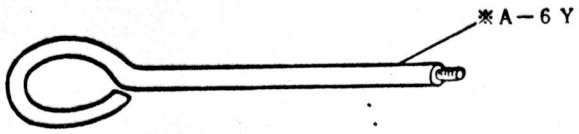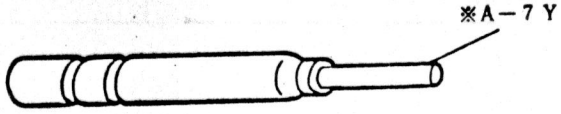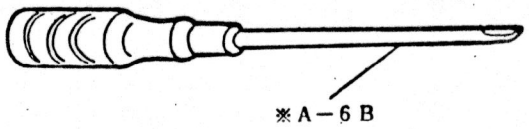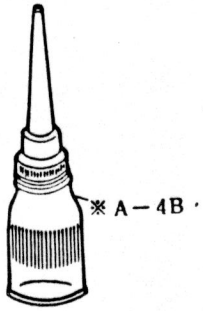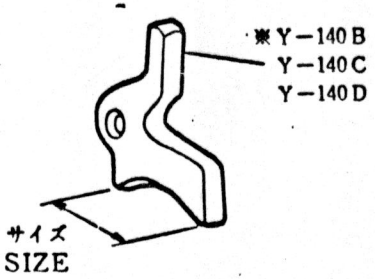
4.